1000 SERIES PULL TRIM INSTALLATION INSTRUCTIONS

2P-03NL-PULL WITH CYLINDER HOLE

2P-02DT-PULL WITHOUT CYLINDER HOLE

IMPORTANT: Only drill 1 1/8" holes on the exterior side of the door and 5/16" holes on the interior side of the door.

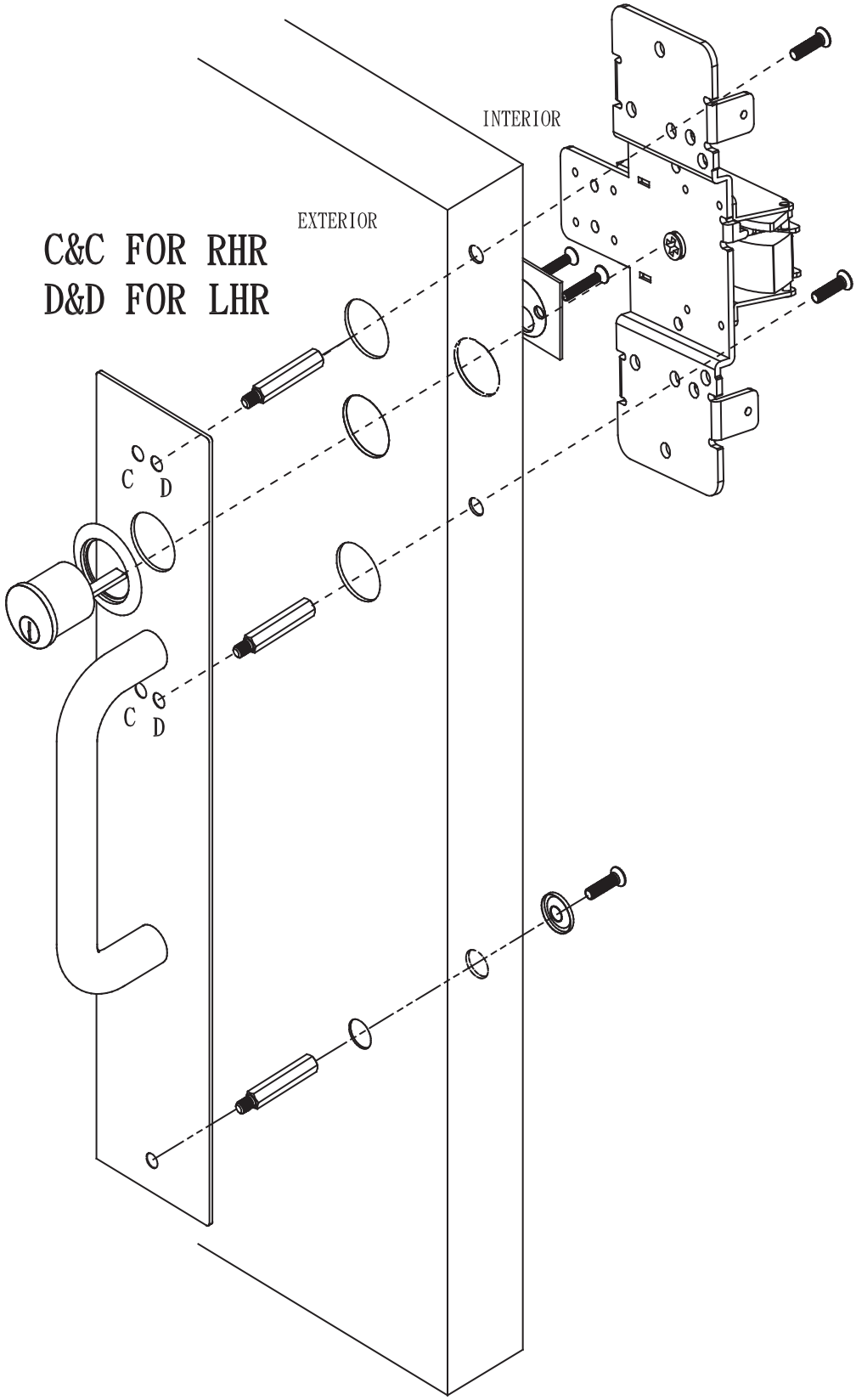

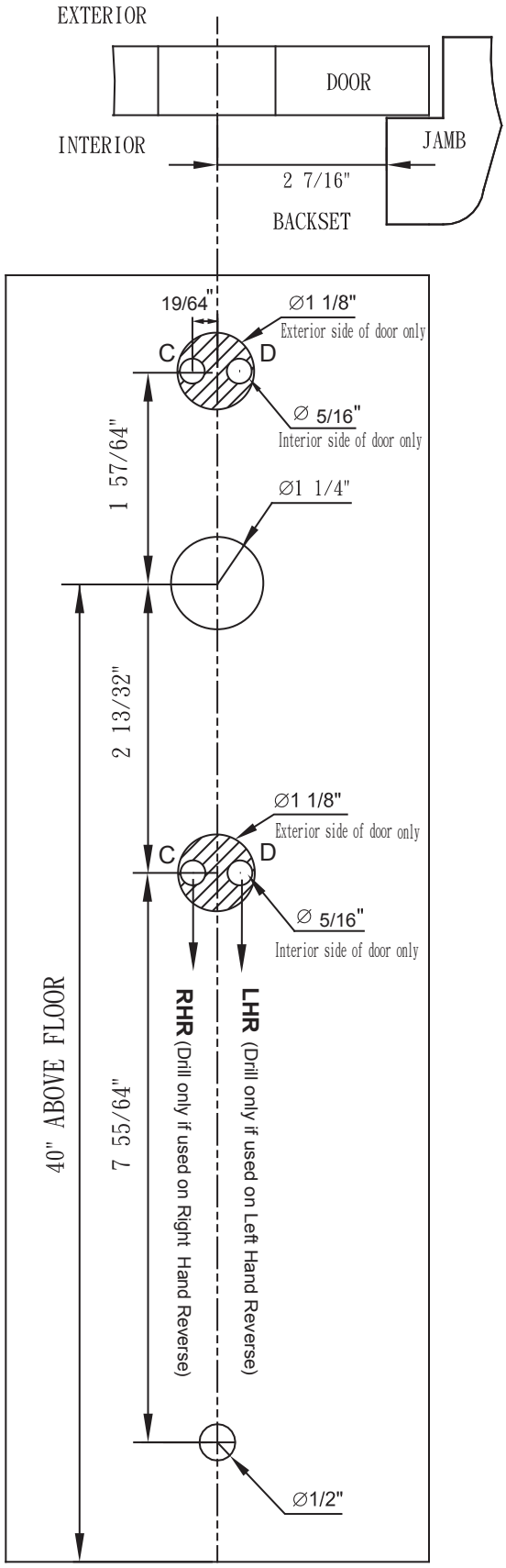

Note: If 2P-02DT is being used then 1 1/4" hole and Rim cylinder are not used.

EDT1-10-2008