Z-Series Template for Optional 1/2" Latch with 2 3/8" Backset

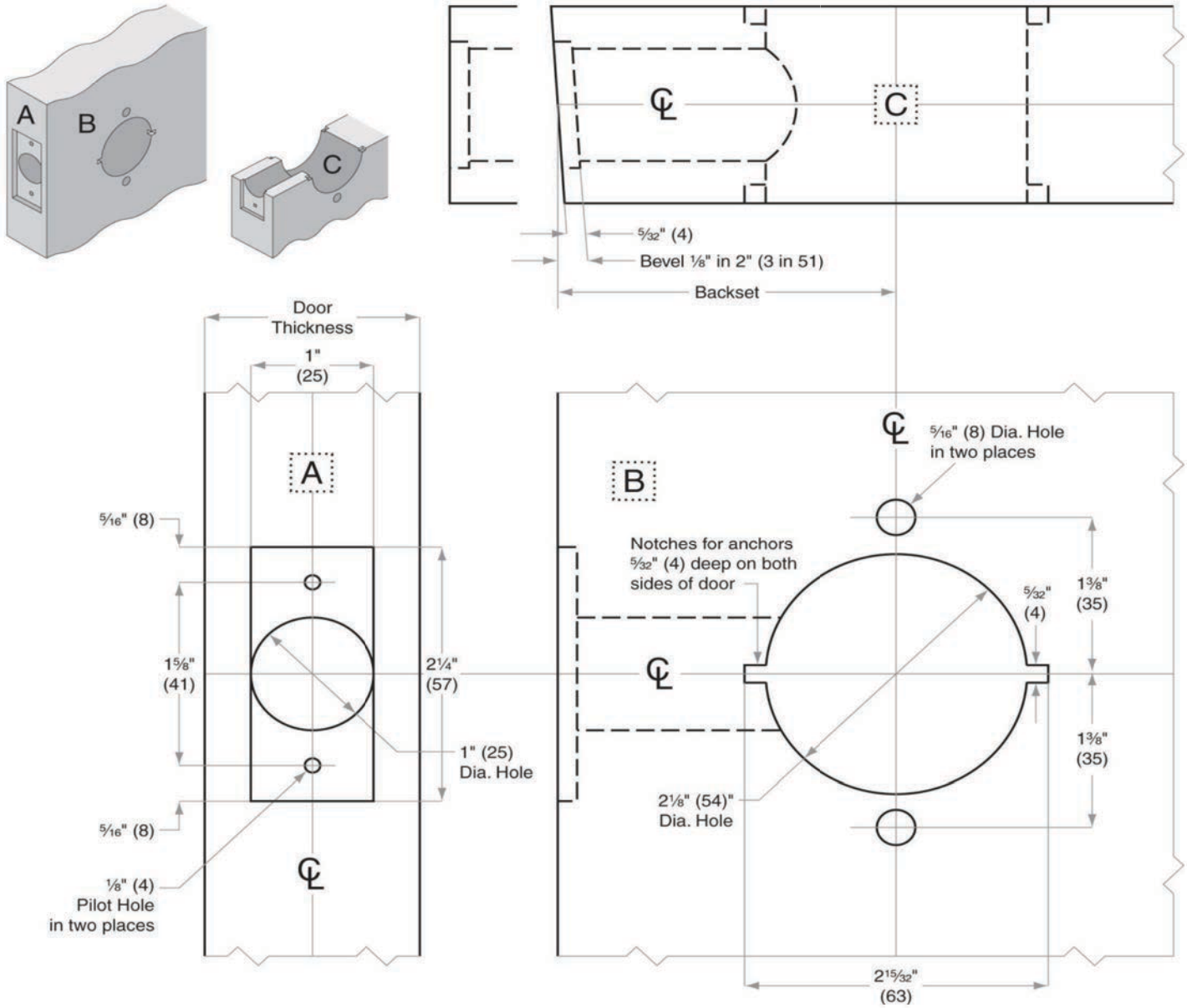

Template No.	Design Hardware Z Series Cylindrical Lockset Optional 1/2" Latch w/ 2 3/8" Backset	Functions
Z.238		75, 76, 82, 86, 87, 90, 110 82IC, 84IC, 86IC, 87IC, 110IC

Not to scale 1:1. Measurements are for reference only. Not a drilling template.

Always consult dormakaba's website for the latest instructions at designhardware.net or call 1-800-392-5209.

Design Hardware is a trademark of dormakaba USA Inc. ©2021 All rights reserved.